REVISIONS			
REV.	DESCRIPTION	DATE	APPROVED
A	INITIAL RELEASE	06/24/25	J. Q

MATERIAL & FINISH:
1.0mm CONNECTOR:
1 BODY: STAINLESS STEEL, PASSIVATED

WR12:
1 CAVITY: BRASS, GOD PLATED

ELECTRICAL DATA:
1 IMPEDANCE: 50 Ω
2 FREQUENCY RANGE: 75~110 GHz
3 VSWR: 1.60 MAX.
4 INSERTION LOSS: 1.2 dB MAX.

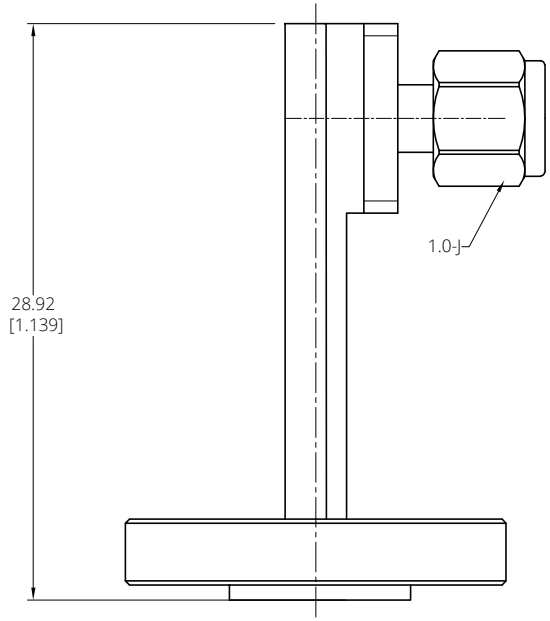

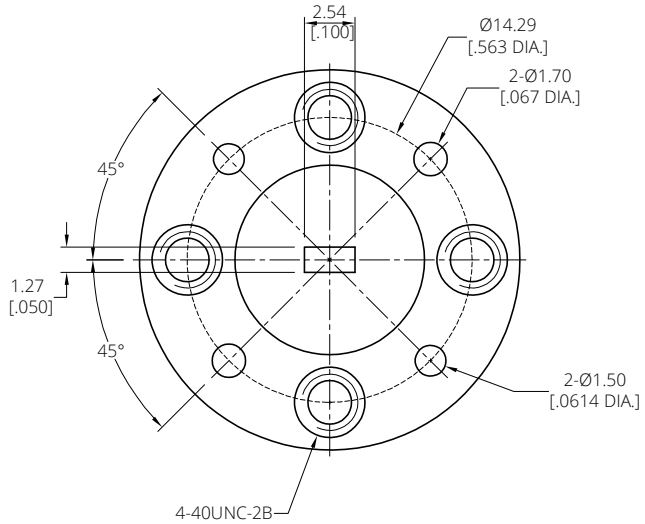

DRAWN	W. Y	DATE	06/24/25
CHECKED	X. Y	DATE	06/24/25
APPROVED	J. Q	DATE	06/24/25

UNLESS OTHERWISE SPECIFIED DIMENSIONS ARE IN MILLINMETERS, DIMENSIONS IN [ ] ARE IN INCHES FOR CUSTOMER REFERENCE ONLY UNLESS OTHERWISE SPECIFIED TOLERANCE ARE:

.XX	±0.13 [.005"]
.X	±0.25 [.010"]
X	±0.50 [.019"]
.X°	±1°
X°	±2°

THESE DRAWINGS AND SPECIFICATIONS ARE THE PROPERTY OF ANOISON ELECTRONICS LTD AND SHOULD NOT BE USED WITHOUT WRITTEN PERMISSION COPYRIGHT © 2025 ANOISON ELECTRONICS LTD

ANOISON

TITLE
WR10 WAVEGUIDE TO COAXIAL 1.0mm MALE RIGHT ANGLE ADAPTERS

VIEW

PART NO.
ANO WR10-1-01

SIZE	SCALE	SHEET	REV.
A3	5:1	1/1	A