REVISIONS			
REV.	DESCRIPTION	DATE	APPROVED
A	INITIAL RELEASE	03/15/23	J. Q

MATERIAL & FINISH:
1 BODY: STAINLESS STEEL 303, PASSIVATED
2 CENTER CONTACT: BERYLLIUM COPPER, GOLD PLATED
3 INSULATOR: PTFE

ELECTRICAL DATA:
1 IMPEDANCE: 50 Ω
2 FREQUENCY RANGE: DC~40 GHz

ENVIRONMENTAL DATA:
1 TEMPERATURE RANGE: -55℃~+165℃
2 2011/65/EU(RoHS) AND 2015/863/(RoHS): COMPLIANT
3 1999/45/EC(REACH): COMPLIANT

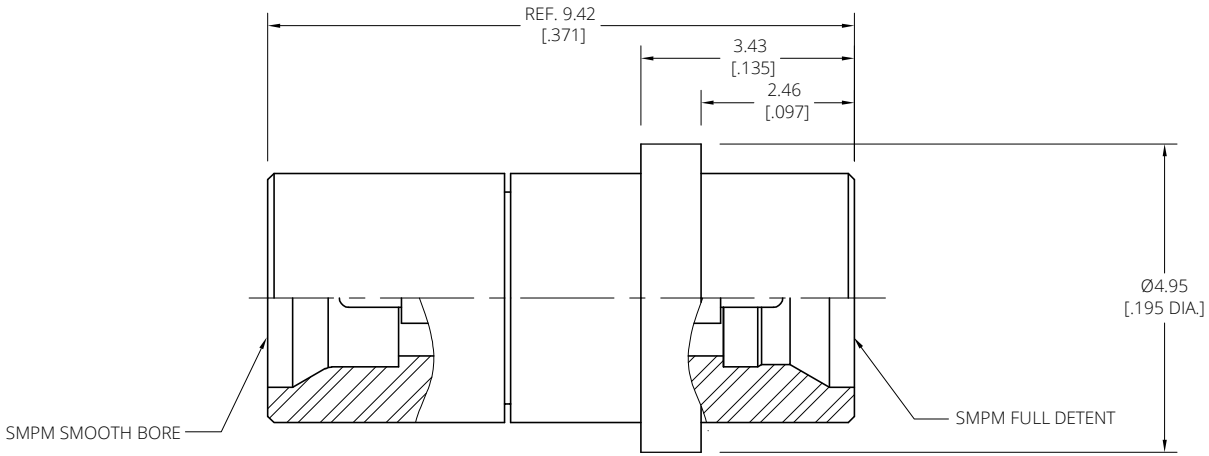

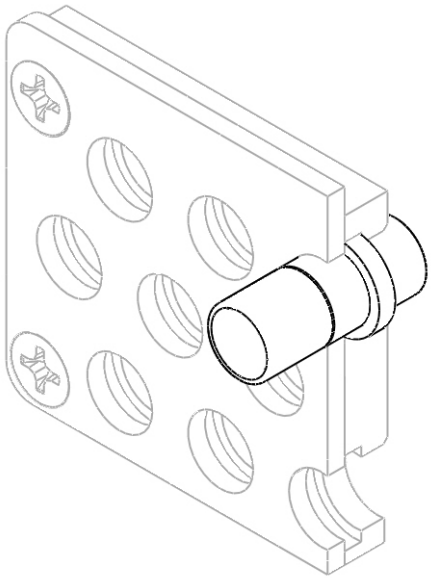

DRAWN	W. Y	DATE	03/15/23
CHECKED	L. Y	DATE	03/15/23
APPROVED	J. Q	DATE	03/15/23

UNLESS OTHERWISE SPECIFIED DIMENSIONS ARE IN MILLIMETERS, DIMENSIONS IN [ ] ARE IN INCHES FOR CUSTOMER REFERENCE ONLY UNLESS OTHERWISE SPECIFIED TOLERANCE ARE:

.XX	±0.13 [.005"]
.X	±0.20 [.008"]
X	±0.50 [.019"]
.X°	±1°
X°	±2°

THESE DRAWINGS AND SPECIFICATIONS ARE THE PROPERTY OF ANOISON ELECTRONICS LTD AND SHOULD NOT BE USED WITHOUT WRITTEN PERMISSION COPYRIGHT © 2023 ANOISON ELECTRONICS LTD

ANOISON

TITLE
ADAPTER, SMPM MALE SMOOTH BORE TO SMPM MALE FULL DETENT FOR VITA 67.3 PLUG-IN MODULE

VIEW

PART NO.
ANO 941-941-1426

SIZE	SCALE	SHEET	REV.
A3	10:1	1/1	A