REVISIONS			
REV.	DESCRIPTION	DATE	APPROVED
A	INITIAL RELEASE	05/03/17	J. QU

MATERIAL & FINISH:

1 BODY: BRASS, NICKEL PLATED
2 RIVET: BRASS, NICKEL PLATED
3 GASKET: MVQ (SILICONE RUBBER)

ENVIRONMENTAL DATA:

1 TEMPERATURE RANGE: -40℃~+125℃
2 2011/65/EU (RoHS): COMPLIANT

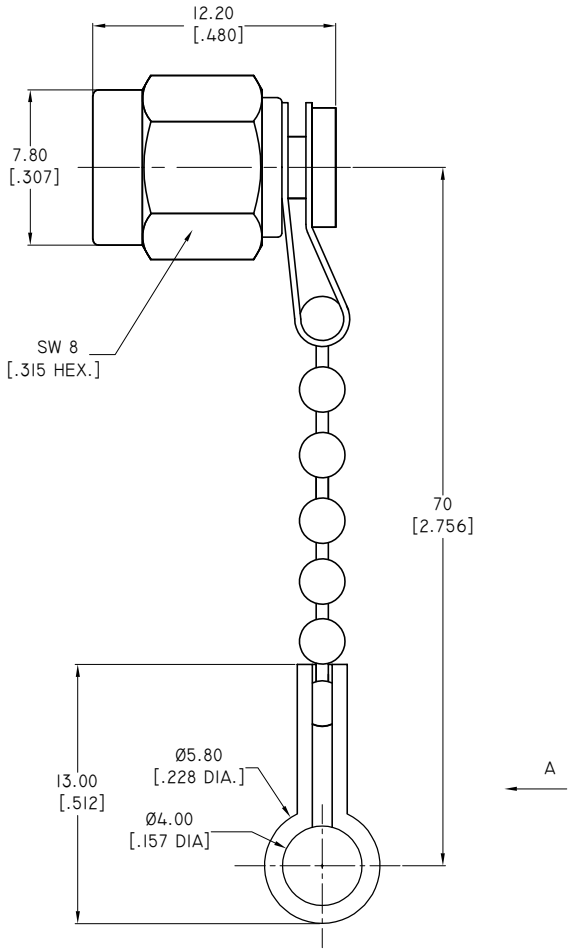

A VIEW

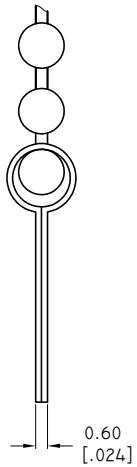

DRAWN	P. CHEN	DATE	05/03/17
CHECKED	L. YANG	DATE	05/03/17
APPROVED	J. QU	DATE	05/03/17

UNLESS OTHERWISE SPECIFIED DIMENSIONS ARE IN MILLINMETERS, DIMENSIONS IN [ ] ARE IN INCHES FOR CUSTOMER REFERENCE ONLY UNLESS OTHERWISE SPECIFIED TOLERANCE ARE:

.XX	±0.13 [.005"]
.X	±0.20 [.008"]
X	±0.50 [.019"]
.X°	±1°
X°	±2°

THESE DRAWINGS AND SPECIFICATIONS ARE THE PROPERTY OF ANOISON ELECTRONICS LTD AND SHOULD NOT BE USED WITHOUT WRITTEN PERMISSION COPYRIGHT © 2017 ANOISON ELECTRONICS LTD

ANOISON

TITLE

CAP, MALE WITH CHAIN FOR SMA, 3.5MM, 2.92MM

VIEW

PART NO. ANO 2111-6099

SIZE	SCALE	SHEET	REV.
A3	4:1	1/1	A